NBS TECHNICAL NOTE 686

U.S. DEPARTMENT OF COMMERCE / National Bureau of Standards

Ultrasonic Calorimeter for Beam Power Measurements

QC
100
.U5753
NO.686
1976
c.2

NATIONAL BUREAU OF STANDARDS

The National Bureau of Standards [1] was established by an act of Congress March 3, 1901. The Bureau's overall goal is to strengthen and advance the Nation's science and technology and facilitate their effective application for public benefit. To this end, the Bureau conducts research and provides: (1) a basis for the Nation's physical measurement system, (2) scientific and technological services for industry and government, (3) a technical basis for equity in trade, and (4) technical services to promote public safety. The Bureau consists of the Institute for Basic Standards, the Institute for Materials Research, the Institute for Applied Technology, the Institute for Computer Sciences and Technology, and the Office for Information Programs.

THE INSTITUTE FOR BASIC STANDARDS provides the central basis within the United States of a complete and consistent system of physical measurement; coordinates that system with measurement systems of other nations; and furnishes essential services leading to accurate and uniform physical measurements throughout the Nation's scientific community, industry, and commerce. The Institute consists of the Office of Measurement Services, the Office of Radiation Measurement and the following Center and divisions:

Applied Mathematics — Electricity — Mechanics — Heat — Optical Physics — Center for Radiation Research: Nuclear Sciences; Applied Radiation — Laboratory Astrophysics [2] — Cryogenics [2] — Electromagnetics [2] — Time and Frequency [2].

THE INSTITUTE FOR MATERIALS RESEARCH conducts materials research leading to improved methods of measurement, standards, and data on the properties of well-characterized materials needed by industry, commerce, educational institutions, and Government; provides advisory and research services to other Government agencies; and develops, produces, and distributes standard reference materials. The Institute consists of the Office of Standard Reference Materials, the Office of Air and Water Measurement, and the following divisions:

Analytical Chemistry — Polymers — Metallurgy — Inorganic Materials — Reactor Radiation — Physical Chemistry.

THE INSTITUTE FOR APPLIED TECHNOLOGY provides technical services to promote the use of available technology and to facilitate technological innovation in industry and Government; cooperates with public and private organizations leading to the development of technological standards (including mandatory safety standards), codes and methods of test; and provides technical advice and services to Government agencies upon request. The Institute consists of the following divisions and Centers:

Standards Application and Analysis — Electronic Technology — Center for Consumer Product Technology: Product Systems Analysis; Product Engineering — Center for Building Technology: Structures, Materials, and Life Safety; Building Environment; Technical Evaluation and Application — Center for Fire Research: Fire Science; Fire Safety Engineering.

THE INSTITUTE FOR COMPUTER SCIENCES AND TECHNOLOGY conducts research and provides technical services designed to aid Government agencies in improving cost effectiveness in the conduct of their programs through the selection, acquisition, and effective utilization of automatic data processing equipment; and serves as the principal focus within the executive branch for the development of Federal standards for automatic data processing equipment, techniques, and computer languages. The Institute consists of the following divisions:

Computer Services — Systems and Software — Computer Systems Engineering — Information Technology.

THE OFFICE FOR INFORMATION PROGRAMS promotes optimum dissemination and accessibility of scientific information generated within NBS and other agencies of the Federal Government; promotes the development of the National Standard Reference Data System and a system of information analysis centers dealing with the broader aspects of the National Measurement System; provides appropriate services to ensure that the NBS staff has optimum accessibility to the scientific information of the world. The Office consists of the following organizational units:

Office of Standard Reference Data — Office of Information Activities — Office of Technical Publications — Library — Office of International Relations — Office of International Standards.

---

[1] Headquarters and Laboratories at Gaithersburg, Maryland, unless otherwise noted; mailing address Washington, D.C. 20234.

[2] Located at Boulder, Colorado 80302.

al Bureau of Standards
2 6 1976
acc.
00
753
686
15

Ultrasonic Calorimeter for Beam Power Measurements

t technical note, no. 686

Thomas L. Zapf
Morris E. Harvey
Neil T. Larsen
Robert E. Stoltenberg

Electromagnetics Division
Institute for Basic Standards
National Bureau of Standards
Boulder, Colorado 80302

U.S. DEPARTMENT OF COMMERCE, Elliot L. Richardson, Secretary

Edward O. Vetter, Under Secretary
Dr. Betsy Ancker-Johnson, Assistant Secretary for Science and Technology

U.S. NATIONAL BUREAU OF STANDARDS, Ernest Ambler, Acting Director

Issued September 1976

NATIONAL BUREAU OF STANDARDS TECHNICAL NOTE 686
Nat. Bur. Stand. (U.S.), Tech Note 686, 36 pages (September 1976)

CODEN: NBTNAE

U.S. GOVERNMENT PRINTING OFFICE
WASHINGTON: 1976

For sale by the Superintendent of Documents, U.S. Government Printing Office , Washington, D.C. 20402
(Order by SD Catalog No. C13.46:686). Price 85 cents (Add 25 percent additional for other than U.S. mailing).

CONTENTS

		Page
1.	INTRODUCTION	1
2.	THEORY	2
	2.1 Calorimetric Methods	2
	2.2 Flow Calorimetry	3
	2.3 Twin Flow Methods	3
3.	DESCRIPTION OF CALORIMETER	4
	3.1 The Twin Series Flow Comparator	4
	3.2 Ultrasonic Absorbers; Vessel Design	4
	3.3 Solid Absorber	6
	3.4 Heat-absorbing Liquid	7
	3.5 Liquid Circulation System	9
	3.6 Heat Exchanger	9
	3.7 Temperature Sensors	10
	3.8 Electrical Heaters	11
4.	HEAT LOSSES IN CALORIMETER	12
	4.1 Heat Loss in the Coupling Liquid	12
	4.2 Heating from Lossy Transducer	13
	4.3 Absorption in Membrane	13
	4.4 Heat Distribution	14
	4.5 Radiant Power Loss	16
5.	ELECTRICAL FEEDBACK AND CONTROL	16
	5.1 Power Feedback	16
	5.2 Temperature Bridge	17
	5.3 Bridge Electronics	19
	5.4 Metering Circuits	21
6.	OPERATIONAL PROCEDURES	21
	6.1 Preliminary Procedures	21
	6.2 Precautions	22
	6.3 Ultrasonic Power Measurements	22
	6.4 Determination of the J, K, and G Factors	23
7.	EQUATIONS OF OPERATION	23
8.	SUMMARY OF MEASUREMENT UNCERTAINTIES	25
9.	ACKNOWLEDGMENTS	26
10.	REFERENCES	27

LIST OF TABLES

Page

Table 1. Summary of estimated uncertainties---------- 28

LIST OF ILLUSTRATIONS

Figure 1. The NBS ultrasonic calorimeter, showing the electrical control unit, the twin, series-flow comparator in a water bath, pumps, and electrical power supply---------- 29

Figure 2. Schematic diagram of the twin, series-flow ultrasonic comparator---------- 30

Figure 3. Schematic diagram of the electrical control unit---------- 31

ULTRASONIC CALORIMETER FOR BEAM POWER MEASUREMENTS

Thomas L. Zapf, Morris E. Harvey, Neil T. Larsen and Robert E. Stoltenberg

An ultrasonic calorimeter has been designed and constructed at the National Bureau of Standards for the measurement of beam power up to a few watts from ultrasonic transducers. The calorimeter, described as a twin, series flow, ultrasonic calorimetric comparator, operates in the frequency range from 1 to 15 MHz with uncertainties less than ± (7% + 0.2 mW). Twin vessels are provided so that thermal effects of an ultrasonic sound beam absorbed in one vessel can be compared rapidly with accurately measured dc electrical power in the other vessel. Absorbing liquid enters each vessel near the ultrasonic input port. The temperatures of the absorbing liquid at the input ports are equalized by a heat exchanger, and the mass-flow rates are the same in both vessels. Twin temperature sensors, located in the output flow from the vessels, are connected in an electrical bridge circuit. In automatic operation the bridge is connected to a feedback circuit. With ultrasonic power introduced into one vessel, the feedback circuit promptly applies power to an electrical heater in the other vessel to regain bridge balance. The ultrasonic power then equals the measured dc power corrected for known errors.

Key words: Calorimeter; ultrasonic calorimeter; ultrasonic power measurements.

1. INTRODUCTION

The accurate measurement of beam power from ultrasonic transducers has become increasingly important to manufacturers and users of ultrasonic equipment especially that used for medical diagnostic and therapeutic purposes. Routine medical applications of ultrasound, and research on the effects of ultrasound on body tissues, require power levels ranging from less than a milliwatt to several watts. Ultrasonic transducers used for nondestructive evaluation equipment are often subjected to harsh environments and rough usage and must be calibrated periodically to correct for deterioration and drift. Often, this testing and calibration must be done by the users of the equipment. This usually requires construction of their own measuring instruments based on phenomena such as radiation force, acousto-optic effects, piezoelectricity, thermoelectricity, or calorimetry. As part of a program to provide needed measurement services for ultrasonic equipment, the National Bureau of Standards has recently developed calorimetric equipment for measuring ultrasonic beam power.

The calorimetric equipment (shown in figure 1) was designed to measure ultrasonic beam power from 1 mW to 10 W, at frequencies from about 1 to 15 MHz. Measurements made with this equipment are referenced to accurately-measurable dc electrical standards. The equipment will accommodate ultrasonic beams having diameters as large as 26 mm. This is sufficient for a wide variety of medical diagnostic and therapeutic transducers, and for many transducers used for

nondestructive evaluation. The most important design goal was to minimize the net error in measurements when the equipment is used within the power and frequency ranges and beam diameters mentioned above.

The equipment in its present form is not portable. It is normally used in a water bath. Although relatively trouble free, it must be regarded as a laboratory instrument requiring some protection from abuse, and a few minutes of daily maintenance.

2. THEORY

2.1 Calorimetric Methods

In a lossy, homogeneous medium in which energy is propagated, absorption (i.e., conversion to heat) causes an exponential reduction of ultrasonic power with propagation distance. The attenuation generally increases with frequency for solids, or with the square of the frequency for liquids. This dependence on frequency presents a peculiar problem in the design of calorimetric ultrasonic power meters. While calorimetric measuring equipment, in general, is considered to be "broadband," the range of frequencies that a particular ultrasonic calorimetric system will accommodate is limited, primarily because of compromises required for optimization to achieve best accuracy.

In any ultrasonic power measuring device, the pressure waves produced by the transducer must be conveyed through a low-loss medium to the measuring region. The commonly-accepted and readily-available coupling medium for medical transducers is water. Some specifications require or suggest that the transducer face be kept at a particular temperature during measurements to simulate conditions of use. This requires that the coupling medium be maintained at the specified temperature, and that there be a flow system for carrying away whatever heat is produced in the coupling medium by losses in the transducer. It also requires that the absorber at the entrance port of the calorimetric vessel be kept at the same specified temperature to prevent transfer of heat to or from the coupling medium. These requirements can be met by using a heat-exchanger in the flow system.

Calorimetric methods have proven valuable for measurements of power and energy in various forms, mechanical, electrical, light, sonic, etc. A comprehensive bibliography of calorimetry in nuclear science has been published by S.R. Gunn [1,2]*, who has also published a review of laser power and energy measurements by calorimetry [3].

Radio frequency and microwave calorimetry is already well established, with numerous manufacturers providing equipment.

In ultrasonics, calorimetric methods have been described by various authors [4,5,6,7,8]. Some of these publications contain references to earlier literature on calorimetry.

---

*Numbers in brackets indicate literature references.

2.2 Flow Calorimetry

In a flow calorimetric system, the applied power, P, is converted to heat, which causes a rise in temperature, ΔT, in the liquid flowing at a constant mass-flow rate, $\dot{m}$, past a temperature sensor. If heat losses in the system are negligible, the power is

$$P = s\dot{m}\Delta T$$

where s is the specific heat of the heat-absorbing liquid. The term "heat-absorbing liquid" or simply "absorbing liquid" will be used to denote that there is conversion to heat from some other form of energy, or that heat is transferred to the liquid from an absorbing solid, or both. The steady-state temperature rise in the flowing liquid in the calorimeter per unit of absorbed power is

$$\Delta T/P = 1/s\dot{m}.$$

For the greatest temperature rise per unit power, the specific heat and the mass-flow rate should be small; however, a small mass flow rate would cause a long volume displacement time,

$$t = m/\dot{m}$$

where m refers to the mass of liquid in the heat-conversion-and-sensing volume of the system, i.e., $m = \rho V$, where V is the volume and ρ is the density of the liquid. It is evident that the sensitivity and response time can be adjusted by changing the flow rate. The volume, V, must be kept to a minimum so that t will be minimized. Yet the vessel size and shape must be such that the ultrasonic beam energy is, as nearly as possible, completely absorbed (converted to heat). Reflections that would allow ultrasonic energy to escape through the ports of the vessel must be minimized. The specific acoustic impedance of the absorbing liquid and any solids in the liquid, must be near that of water (the standard coupling medium) to minimize reflections at interfaces.

2.3 Twin Flow Methods

Advantages of twin, series-flow calorimetric methods were recognized by Gunn [9] and used for measuring the power of alpha-radioactive samples. He points out the decreased need for accurately controlling the flow rate and temperature rise. Wholey and Boff [10] described a twin, series-flow system with feedback for the measurement of microwave power. The features of the system are desirable and appropriate to an ultrasonic calorimeter, and the present ultrasonic calorimeter is generally similar to the Wholey and Boff system.

In a twin, series-flow system, the temperatures of the liquids at the ports and the mass-flow rates are the same in both vessels, ambient temperature effects are minimized, and insulation requirements are not as stringent as in single flow systems. However, it is desirable that the temperature

sensors be well matched over the range of temperatures encountered. A heat-exchanger is required to keep the temperatures of the absorbing liquid and the transducer-cooling liquid nearly equal at the inputs to each vessel.

A twin system can be used as a comparator for comparing the powers from two ultrasonic transducers, or as a standard power meter with the substitution of (or comparison with) known electrical power.

3. DESCRIPTION OF CALORIMETER

3.1 The Twin Series Flow Comparator

The calorimeter may be described as a twin, series-flow, ultrasonic calorimetric comparator for measuring ultrasonic beam power from ultrasonic transducers. Figure 2 shows schematically the calorimetric vessels, sensors, pumps, and the heat exchanger. The temperatures of the flowing liquids at the ultrasonic ports, and the mass-flow rates, are the same in both calorimetric vessels, which are of identical design. Twin temperature sensors, located in the output flow from the vessels, are connected in an electrical bridge circuit. The bridge is connected to a null indicator or, in the automatic mode, to a feedback circuit. With ultrasonic power introduced into one vessel, the feedback circuit promptly applies power to an electrical heater in the other vessel to regain bridge balance.

The calorimeter is normally placed in a temperature-controlled water bath which may be operated from 2°C above room temperature to 40°C without use of a cooling coil. A cooling coil permits use at lower temperatures. The electrical control unit and the pump with three pump heads are placed on the table beside the water bath.

Each vessel has a port for the introduction of ultrasonic power and each contains an electrical resistance heater for inserting accurately measurable electrical power. A thin, non-reflecting membrane at each ultrasonic port prevents mixing of the absorbing liquid in the vessel and the coupling liquid. Water is used as a coupling medium. The absorption of ultrasound in water in the 1 to 15 MHz range is very much smaller than in the absorbing liquid. The heat conductivity of water is larger, and the specific heat is larger; therefore, water can effectively transfer heat from the ultrasonic transducer and carry it away with a relatively small increase in water temperature.

3.2 Ultrasonic Absorbers; Vessel Design

Among the factors that were considered in choosing suitable ultrasonic absorbers and heat transfer materials were (1) the specific acoustic impedance, (2) the absorption per unit distance, (3) the temperature rise per unit energy, (4) the pressure required to circulate the liquid, (5) long time compatibility of the liquid with other system materials, and (6) toxicity and hazardous characteristics of the material.

In choosing an assortment of materials as candidates for use as absorbers the most important requirement was that reflection of power from the first surface of the absorber be minimized. For the power reflection ratio to be less than 1% at the interface between the coupling medium (water) and the absorbing material, it is necessary that the specific acoustic impedance, ρc, at the absorbing material be within the range $(1.5 \pm 0.3) \times 10^6$ kg·m^{-2}·s^{-1}. This requirement limits the number of liquids and solids that can be considered as potentially useful.

Other factors include ultrasonic attenuation, which for calorimetry means absorption by conversion to heat without significant scattering effects. A large value of attenuation per unit distance, α_x, for all frequencies of interest is essential. A low value of specific heat, s, is desirable so that a given value of power causes a large change in temperature. A high value of heat conductivity, k, is desirable to minimize the size of heat exchanger required for the system. The viscosity of the liquid should be low to facilitate mixing in the flowing liquid and minimize the pressure needed to obtain a required mass-flow rate, $\dot{m}$.

A number of more promising liquids were investigated in some detail. Among the liquids having relatively high attenuation at 1 MHz, carbon disulfide was ranked very high for its good impedance match with water and its low viscosity; but, it is highly toxic, flammable, and incompatible with many materials. Oils of various kinds, and silicone fluids, although showing high attenuation and satisfactory specific acoustic impedance, had higher viscosity than desired for a flow system. A flow system using these liquids in conical vessels could possibly have been developed, but heat distribution errors would have been large and the response time was estimated as many times greater than that obtainable using a combination of a solid as an ultrasonic absorber and a liquid as a vehicle for heat transfer from the solid to the sensor in a flow system.

By using a solid as the principal absorber and a liquid to transfer the heat to the sensor, the vessel size, the effective volume of liquid, the effective volume-displacement time, and the power-feedback response time could all be reduced. However, the time required to attain heat-transfer equilibrium between the solid and the liquid can be significant. In the calorimeter, the equilibrium time is kept small by flowing the liquid over the surfaces of a number of thin wafers of the solid so that the heat transfer distance from the middle of the solid to the liquid is small.

The absorbing solids and liquids are contained in a cylindrical vessel of height, h. Reflections of ultrasound from the bottom make the effective absorbing path length, x, approximately double the height, i.e., $x \simeq 2h$. Ideally, the ultrasonic power would be completely absorbed (converted to heat) in the vessel. Some power is absorbed in the walls and bottom of the vessel which, if well insulated externally, yields the heat to the liquid. Some power is returned in the direction of the ultrasonic port. That portion which

is not reflected from the surface of the transducer back into the absorbing liquid, or the portion which escapes through the water coupling medium over the upper edge of the vessel, is not measured, and therefore is a loss of power contributing to the errors in the measurement. At the lowest design frequency, the depth of the absorbing material must be chosen so that the absorbing path length, x, is sufficient to make the reflected unabsorbed power acceptably small. In a homogeneous absorbing material, the power in the propagating beam at a distance, x, is diminished exponentially,

$$P = P_o e^{-2\alpha_x x}$$

where P_o is the power at x = 0 and α_x is the amplitude attenuation per unit distance in the material. Then, for each absorbing layer in the vessel,

$$x = (-1/2\alpha_x) \ln(P/P_o)$$

The value of h is obtained from the cumulative value of x for all solid and liquid absorbing layers. The height, h, should be as small as possible, while allowing for adequate absorption, to minimize the response time of the system. Measurements on the completed assembly by a pulse-echo method at 2 MHz showed a maximum power reflection of less than 0.001, and this source of reflection was the bottom of the vessel.

3.3 Solid Absorber

The absorbing solid consists of four wafers of silicone elastomer and four wafers of butyl rubber. Each wafer is about 1 mm thick. The silicone elastomer has a specific acoustic impedance of about 1.5×10^6 $kg \cdot m^{-2} \cdot s^{-1}$, which is nearly equal to that of water and the absorbing liquid, so that the power reflection coefficient is about 0.001. The four layers of the silicone elastomer provide a power attenuation ratio for two-way travel at 1 MHz of $P/P_o = 0.36$ as measured by pulse transmission techniques. Following these are four wafers of butyl rubber. At the interface between the liquid and the butyl rubber, the power reflection coefficient is about 0.02. This is acceptable because the reflected power must pass through the four upper layers of silicone elastomer with a one-way power attenuation ratio of 0.6. About 75% of this is re-reflected by the transducer face back into the calorimeter. Then the actual loss is 0.02 x 0.6 x .25 = 0.003 = 0.3%. The power attenuation ratio for two-way travel in the butyl rubber at 1 MHz is 0.013. The total power attenuation ratio for two-way travel at 1 MHz is then 0.36 x 0.013 = 0.005 = 0.5%. Re-reflection from the transducer face reduces the loss to approximately 1/4 of this, or to about 0.1%. Thus, the net loss of power reflected out of the vessel determined by summing the losses at the two interfaces is estimated as less than 0.4% at 1 MHz and inversely proportional to the frequency. At

frequencies above 5 MHz, for example, the error is less than 0.1%. This is obtained using the correction +0.4%/f, where f is the frequency in MHz. The residual error (i.e., the remaining error of unknown sign after the correction has been applied) is then believed to be within ± 0.1% at frequencies below 5 MHz and negligible at higher frequencies.

Although reflections in the calorimetric vessel result in only a very small power loss, they can cause small, but noticeable, variations if the transducer is moved slightly during a test. To reduce the effect, it is good practice to rock the transducer slightly during the last minute of each test run, and average the measurement results of three test runs. This practice has the effect of randomizing an error that otherwise may occur as a systematic error.

An estimate of the time required for the heat developed in the solid absorber to attain an equilibrium gradient with the moving liquid can be obtained by considering the thermal diffusion in the solid. The time constant, τ, for thermal diffusion of heat through a distance, x, of a material having density, ρ, specific heat, s, and heat conductivity, k, is

$$\tau = x^2 \rho s / k.$$

In the butyl rubber disks, the half-thickness is $x = 0.5 \times 10^{-3}$ m, $\rho = 1.2 \times 10^{-3}$ kg·m^{-3}, $s = 2.0 \times 10^{3}$ J·kg^{-1}·K^{-1}, and $k = 0.09$ W·m^{-1}·K^{-1}. Then $\tau = 7$ s. Thermal diffusion is complete within 1% after $5\tau = 35$ s.

3.4 Heat-absorbing Liquid

The heat-absorbing liquid is an inert perfluorinated liquid that is commercially-available. It has a density of 1.9×10^{3} kg·m^{-3}, a specific acoustic impedance of 1.4×10^{6} kg·m^{-2}·s^{-1}, an ultrasonic attenuation per unit distance divided by f^2 of 1.6×10^{-12} Np·m^{-1}·s^{2}, a specific heat of 1.0×10^{3} J·kg^{-1}·K^{-1}, a viscosity of 7×10^{-3} Pa·s, and is non-toxic and non-corrosive. The specific acoustic impedance is close to that of water, so that the power reflection coefficient is less than 0.12%. An estimated 75% of these losses are reflected from the transducer face and reintroduced into the vessel, leaving a net loss less than 0.03%.

The use of water as a heat-aborbing liquid was considered, because it has high heat conductivity, and lower viscosity. Its use would probably result in smaller thermal time constants in the system, but the mass-flow rate would have to be reduced to keep the $\Delta T/P$ sensitivity high. However, it was not used because it is corrosive and could cause electrolysis in the electrical heater.

1%. At lower frequencies the error becomes less significant because of the frequency-squared absorption characteristics of the absorbing liquid. Although this evaluation is subject to considerable error (e.g., from laminar flow differences in the liquid under the membrane for electrical versus ultrasonic heating), it is believed desirable to apply a correction factor of (1 + 0.0005 f), where f is the frequency in MHz. The residual error is then believed to be within ± 0.02% f.

At the bottom of the vessels, absorption of ultrasonic or electrical energy is essentially complete. Both vessels are of similar construction, they are in similar, thermally-insulated, environments, and have nearly equal temperatures at the bottom. Therefore, the heat losses through the bottoms of both vessels are small and nearly equal; hence, the net error is negligible.

Air convection loss from each vessel were appraised by using a special test vessel and found to be less than 0.4% when the vessels are insulated by filling the case with polystyrene beads, and about 0.6% if left unfilled. Because these losses from each vessel are approximately equal, the net error should be less than 0.1%. Other tests indicate that losses by conduction through the flange and water well could cause a loss of as much as 1.5% at high frequencies or when the A' heater is used. This is probably the major source of the heat-distribution errors that are effectively corrected by application of the heat-distribution factor, H, to be discussed.

Losses through the cylindrical sidewall and flange depend on the heat distribution in the vessel. As mentioned, this depends on the frequency of the ultrasound, or the location of the electrical heater, in each vessel. Sidewall heat-distribution errors were evaluated repeatedly by using the A' and A" heaters. The A" heater simulated the heat source distribution at ultrasonic frequencies near 0.8 MHz, and the A' heater simulated heating at frequencies higher than 10 MHz. To correct for the heat distribution errors at all frequencies based on data obtained with the A' and A" heaters, an interpolation formula was developed. Heat-distribution interpolation factors as a function of frequency were calculated based on the known values of the attenuation-per-unit-distance and thickness of each layer of material in the vessel. The interpolation formula is

$$T = T' - N(T' - T''),$$

where T' and T" are the measured heat-loss corrections corresponding to the A' and A" heaters, and N is an interpolation factor. The heat-distribution correction factor is given by

$$H = 1 + T.$$

Typical values of T' and T" are less than 0.005; thus N need not be known very accurately to provide adequate interpolation accuracy. Indeed, the average of a set of 13 determinations of these values over a period of 4 months was T' = 0.003 and T" = 0.000. In practice it is convenient to use these values to determine T and H rather than to redetermine the values at intervals. The

3.5 Liquid Circulation System

A pump is needed in each leg of the system to provide pressure to move liquid through the vessel, the sensor, and the heat exchanger, keeping the pressure at the input ports to each vessel very near atmospheric pressure. A third pump head circulates the coupling liquid through the heat exchanger to the water well above each vessel. The pump heads can be driven by a variable speed drive motor from about 0.1 to 2 revolutions per second to provide volume flow for the absorbing liquid from 0.08×10^{-6} to 1.7×10^{-6} $m^3 \cdot s^{-1}$. The shortest response time is obtained when the pump is operated at maximum speed. If the pump speed is too great, the excessive pressure in the system can cause fluid to leak out or air to leak in. As pump speed is reduced to a very low level, the response time increases and too much heat is lost from the fluid before it reaches the sensor. A "normal" pump speed equivalent to about 1.2×10^{-6} $m^3 \cdot s^{-1}$ was chosen to avoid these troublesome extremes.

A bypass valve is provided to allow control of the relative pressures at the membranes in the A and B vessels when the pumps are operating at the normal flow rate. If there were no bypass circuit, and if one of the pumps tended to pump more than the other, pressure at one membrane could build up to a high level tending to stretch and burst it.

The reservoir and clamps provide a ready source of liquid to accommodate changes in the system volume.

Each pump head introduces heat energy into the system at a rate proportional to the speed of the pump and the torque. The power dissipated in frictional losses in pumping is

$$P = 2\pi ST$$

where S is the pump speed, and T is the frictional torque. At typical values of $S = 1.2$ $rev \cdot s^{-1}$ and $T = 0.14$ $N \cdot m$ (measured value), then $P = 1.1$ W. A portion of this power is carried away by the pump hardware, and a portion is transferred to the liquid causing a rise in temperature. The heat produced in the liquid is a load on the heat exchanger. The load is greatest when the mass-flow rate is greatest. In the twin flow system, twin pump heads tend to equalize the heating in each leg, thereby minimizing this source of error. Any residual unbalance is eliminated by the initial nulling balance adjustment required as part of the operational procedures.

3.6 Heat Exchanger

A constant-temperature water bath with three tubes functions as a heat exchanger to insure controlled and nearly equal temperatures for the liquids at the entrances to the vessels. The temperature of the water bath can be controlled at a specified temperature between 25 and 40°C. A small, constant, temperature difference between vessels can be corrected by the initial balance procedure. However, it is desirable to keep the temperature difference small

(say, less than 5% of the temperature rise created by the ultrasonic and electrical heating) to avoid large temperature differences at the sensors. A large temperature difference between vessels could make the heat losses in the vessels unequal and cause an error.

In the chosen design, all three tubes are 6 m long and the absorbing liquid and the coupling liquid are thermally-coupled closely to each other. The tubes are arranged so that the liquids are equally exposed to whatever temperature differences may exist in the bath.

3.7 Temperature Sensors

The temperature sensors are nickel-iron alloy resistance thermometers of approximately 676 ohms at 25°C, with a temperature coefficient of resistance of about 3 $\Omega \cdot K^{-1}$, or a fractional change of about 0.004 K^{-1}. The voltage across each sensor is about 0.2 V, and the temperature coefficient of output voltage of the sensor-bridge is $e/\Delta T = 0.0008\ V \cdot K^{-1}$. When the liquid exhibits a temperature rise per unit power of $\Delta T/P = 0.53\ K \cdot W^{-1}$, which corresponds to the maximum mass-flow rate, the sensor circuit voltage/power ratio is $e/P = (e/\Delta T)(\Delta T/P) = 0.0004\ V \cdot W^{-1}$. At lower mass-flow rates, this figure would be proportionately higher. A more convenient measure of sensitivity can be defined as the inverse of the above ratio, which is $S = P/e = 2.5 \times 10^{3}\ W \cdot V^{-1}$.

The calibration procedure, outlined later in this paper, will correct for some mismatching of the sensor sensitivities. To facilitate bridge circuit design, the sensor elements should be of nearly equal resistance. Also, they should be matched so that, for a given change of temperature, the fractional change of resistances will be nearly equal. For a temperature change of 27 K, which is 5 times as large as expected, the measured values of the fractional change of resistance per kelvin was $4.576 \times 10^{-3}\ K^{-1}$ and $4.578 \times 10^{-3}\ K^{-1}$, the ratio of these being 0.9996, indicating a mismatch well under 0.1%.

The sensors are each mounted in a thermometer holder and thermometer well through which flows the absorbing liquid. Because of small differences in the shapes of the sensors, the holders,and the wells, the sensitivities of the sensors, as mounted, can be unequal by as much as a few percent. The effect of the inequality is eliminated by application of the J or K correction factor determined in the calibration procedure, the uncertainty of the measurements (electrical) being ± 0.5%, or less.

A mismatch in the self heating effect in the sensors can cause the bridge balance to be a function of the oscillator voltage. It was found that a 1% change in oscillator voltage causes a change in bridge balance equivalent to a power change of 0.17 mW. The specifications for the oscillator list a temperature coefficient of voltage of 0.002 K^{-1}. After a warmup period of 15 minutes or more, the oscillator should be so stable that changes in the null balance from this cause should remain well within 0.12 mW during the measurement period.

Throughout the system the liquid is in laminar flow. The thermal patterns in the flowing liquid can be different for each electrical heater and ultrasonic transducer. To prevent significant errors, thermal diffusers are inserted in the sensor housing in front of the sensor. The thermal diffusers consist of a copper disk having holes near the periphery, and wads of fine copper wire. The high heat conductivity of these elements in the line of flow makes the sensor response less dependent on the particular thermal pattern in the laminar flow in the output tube from the vessel. Residual errors from this effect are believed to be less than ± 1%.

3.8 Electrical Heaters

The A and B heaters were made from resistance wire (0.0254 mm diameter, 26 ohms per meter) cut to a length to give 10 ohms resistance. The wire was bent to a zig-zag pattern and attached with thread to an aluminum oxide disk. This design exposes nearly all of the wire to the absorbing liquid. The heaters can dissipate 10 watts.

In the first calorimeter constructed, two extra heaters were inserted in one of the vessels to evaluate heat distribution errors. The A' heater (1.7 ohms) was located at the top of the vessel diametrically opposite the liquid inlet port. It simulated ultrasonic heating at 15 MHz in which ultrasound absorption is more than 95% complete before ultrasound enters the second layer of rubber.

The A" heater (1.8 ohms) was distributed vertically through the layers of rubber in a "W" shape. It simulated ultrasonic heating at 0.8 MHz in which ultrasound absorption is approximately uniform through the vessel. The heaters were attached to copper studs in the flange above each vessel. A loss (I^2R) of power could occur through the copper studs and copper wires (AWG No. 24) connected thereto. By measuring the temperature difference along a known length of a potential-lead wire of the same material and size as the current-carrying wires, this loss was estimated as about 0.08%.

In the use of the A" and A' heaters, another heat loss occurs from conduction through their copper studs and then through the plastic flange and water well to the flowing water. The loss, expressed as a fraction of the heater power, was estimated by using heat transfer formulas as approximately 0.3%. Thus, the total loss through the studs is believed to be less than 0.4%. This would result in an error in the measurement of ultrasonic power. To correct for this error of known sign, a correction of -0.3% is applied. The residual error is then believed to be within ± 0.1%.

The heat developed in the current-carrying lead-in wires (I^2R loss) flows into the calorimeter vessel and into the case. The part that flows into the vessel can be significant. The resistance of one current-carrying wire 0.15 m long is R = 0.013 ohm. When the current I = 0.95 A in the 1.7 ohm heater, the power developed is $P = I^2R = 0.012$ W per wire. There are two current-carrying wires, and if the assumption is made that the power divides equally between calorimeter and shield, the power injected into the calorimeter is 0.012 W. This would result in 0.8% heat power injected into the heater that is not measured electrically. Ginnings and West [11] have suggested a solution to this problem. To correct for this error at each heater, one of the small-diameter potential leads was left connected to the junction of the current-carrying wire and the copper stud at the calorimeter vessel, and the other potential lead was connected to the other current-carrying wire near a foil heat sink attached to the inside surface of the case. With these connections, the heat developed in one current-carrying wire is measured as electrical power in the heater, and equals the heat introduced into the vessel from the near part of the two current-carrying wires. With this corrective measure incorporated, the residual error from this source is believed to be less than ± 0.1%.

4. HEAT LOSSES IN CALORIMETER

4.1 Heat Loss in the Coupling Liquid

The fraction of ultrasonic beam power converted to heat in the water coupling liquid between the transducer and the membrane can be calculated and a correction applied to the calorimetrically-measured power to yield the total beam power emitted from the transducer. The coupling-loss correction factor is defined here in terms of the exponential attenuation formula for power, α_x being the distance attenuation coefficient,

$$C = P_o/P = e^{2(\alpha_x/f^2)f^2x}$$

where P_o is the ultrasonic power entering the water coupling medium of depth x, P is the ultrasonic beam power emerging from the water and entering the calorimeter through the membrane, $\alpha_x/f^2 = 20 \times 10^{-15}$ Np·m^{-1}·s^2 at 28°C, and f is the ultrasonic frequency in Hz. For example, at f = 15 MHz, if x = 4.6 mm, the calorimetrically-measured power should be multiplied by C = 1.042. In the temperature range from 25-40°C a more accurate correction can be calculated if the attenuation is determined from

$$\alpha_x/f^2 = [20 - 0.417(T - 28°C)] \times 10^{-15} \text{ Np·m}^{-1}\text{·s}^2.$$

The distance x = 4.6 mm is the distance from the membrane to the shoulder of the water well upon which a transducer would be placed. If the active surface of the transducer is above this shoulder, an additional distance

should be added to 4.6 mm to obtain the total distance, x, for use in the formula. If allowance for error of about ± 1 mm in the distance measurement is assumed (to allow for uncertainty in the position of the membrane as well as in the distance measurement), the uncertainty in total beam power at 15 MHz for 6 mm depth of coupling medium is ± 1%.

4.2 Heating from Lossy Transducer

For evaluating the effect of heating from a lossy transducer, a special transducer housing was prepared in which the piezoelectric element was replaced by a copper disk to which an electrical heater (resistor) was attached. When this "transducer" was placed in the ultrasonic port of the calorimeter and energized with known power, the power measured by the calorimeter was a measure of the heat transfer downward through the membrane. The ratio of power transferred into the calorimeter (at a thermal flow rate) to the power loss in the "transducer" was measured and found to be 2.2%. Assume that a typical solid-backed ceramic transducer has an efficiency of 50%, i.e., that the ultrasonic beam power and the power loss in the transducer (and its mount) are equal. Also assume that less than 1/3 of the heat loss comes through the face of the transducer, most of it escaping through the backing and sides. Then the error (assuming no correction is made) from heat transfer downward through the membrane from the transducer is less than +0.7% for a normal flow rate. For an air-backed quartz transducer having an efficiency of 95%, the estimated error is about +0.1%. If a correction is applied based on these estimates, the residual uncertainty for solid-backed ceramic transducers may be considered as ± 0.3%, and ± 0.1% for air-backed quartz transducers. Based on the above considerations, the correction factor for a solid-backed ceramic transducer is L = 0.993, and the correction factor for an air-backed quartz transducer is L = 0.999.

4.3 Absorption in Membrane

A thin membrane separates the coupling liquid (water) from the absorbing liquid. The membrane is not completely acoustically transparent. A membrane of thickness $x = 13 \times 10^{-6}$ m (i.e., 0.0005 inch) is thin relative to a wavelength at 1 MHz, and at 15 MHz x is about 0.1λ in polyethylene ($\lambda = 1.3 \times 10^{-4}$ m). At 15 MHz the attenuation per unit distance in bulk polyethylene is about 8.1×10^{2} Np·m^{-1}, and for $x = 13 \times 10^{-6}$ m, $\alpha = \alpha_x x = 1.0 \times 10^{-2}$ Np, and $P/P_o = e^{-2\alpha} = 0.98$. Thus, about 2% of the incident power would be converted to heat in a thickness of bulk material equal to that of the membrane. In the moving membrane of thickness about 0.1λ the loss is probably smaller than that calculated. Some of this heat is conducted to the absorbing liquid, and some is carried away by the water coupling liquid. The latter constitutes

a source of error, probably less than -0.5% at 15 MHz, and proportionately smaller at lower frequencies. A correction factor of (1 + 0.00025 f), where f is the frequency in MHz, is applied. The residual error is then believed to be within ± (0.01 f)%.

4.4 Heat Distribution

The heat distribution in the ultrasonically-heated vessel varies with frequency. At low frequencies, conversion of ultrasonic energy into heat takes place over somewhat greater depth than at higher frequencies. Ideally, the heat distribution caused by ultrasonic absorption should be duplicated by the electrical heater. Because the ultrasonic absorption pattern varies with frequency, a fixed, distributed electrical heater can provide approximately equivalent heat distribution at only a single ultrasonic frequency. The electrically heated liquid then yields heat to the absorbing solid material downstream from the heat source causing a large time constant. To avoid a long response time in normal operation, the B vessel contains a single electrical heater, B (10 ohms), at the bottom of the vessel. The A vessel contained three heaters, one temporary heater near the top, A', one temporary heater distributed vertically, A", and one at the bottom, A (10 ohms). The A and B electrical heaters are under all solid absorbing material. When these heaters are used, the electrical-heating volume-displacement time is reduced to a minimum and reflections from the heater and its framework are acceptable. With this arrangement, heat-distribution errors are to be expected, and require quantitative evaluation. Heat can be lost from each vessel at its top, bottom, and sidewall. At the top of the vessel, heat can enter or exit through the membrane if a temperature difference exists across the membrane. This temperature difference is kept small by the heat exchanger so that the coupling liquid and absorbing liquid are at very nearly the same temperature as these liquids move over and under the membrane in a laminar-flow pattern. Ultrasonic absorption in the absorbing liquid just beneath the membrane can cause a rise in temperature with a consequent heat loss through the membrane. A measure of the largest errors to be expected from heat transfer upward through the membrane was obtained by the use of special heaters. Two electrical-resistance heaters were mounted in the upper part of one vessel. One of these was temporarily located at the side of the vessel close to the entrance of the absorbing liquid so that it would yield heat to the absorbing liquid passing under the membrane. The other (A', previously described) was located at the side of the vessel opposite the entrance so that its heat was yielded to the absorbing liquid just after passing under the membrane. By applying equal power to each of these heaters in succession, the heat loss upward through the membrane was evaluated. Roughly half the membrane heat-loss error so obtained can be considered equivalent to that at 15 MHz and was found to be less than

1%. At lower frequencies the error becomes less significant because of the frequency-squared absorption characteristics of the absorbing liquid. Although this evaluation is subject to considerable error (e.g., from laminar flow differences in the liquid under the membrane for electrical versus ultrasonic heating), it is believed desirable to apply a correction factor of (1 + 0.0005 f), where f is the frequency in MHz. The residual error is then believed to be within ± 0.02% f.

At the bottom of the vessels, absorption of ultrasonic or electrical energy is essentially complete. Both vessels are of similar construction, they are in similar, thermally-insulated, environments, and have nearly equal temperatures at the bottom. Therefore, the heat losses through the bottoms of both vessels are small and nearly equal; hence, the net error is negligible.

Air convection loss from each vessel were appraised by using a special test vessel and found to be less than 0.4% when the vessels are insulated by filling the case with polystyrene beads, and about 0.6% if left unfilled. Because these losses from each vessel are approximately equal, the net error should be less than 0.1%. Other tests indicate that losses by conduction through the flange and water well could cause a loss of as much as 1.5% at high frequencies or when the A' heater is used. This is probably the major source of the heat-distribution errors that are effectively corrected by application of the heat-distribution factor, H, to be discussed.

Losses through the cylindrical sidewall and flange depend on the heat distribution in the vessel. As mentioned, this depends on the frequency of the ultrasound, or the location of the electrical heater, in each vessel. Sidewall heat-distribution errors were evaluated repeatedly by using the A' and A" heaters. The A" heater simulated the heat source distribution at ultrasonic frequencies near 0.8 MHz, and the A' heater simulated heating at frequencies higher than 10 MHz. To correct for the heat distribution errors at all frequencies based on data obtained with the A' and A" heaters, an interpolation formula was developed. Heat-distribution interpolation factors as a function of frequency were calculated based on the known values of the attenuation-per-unit-distance and thickness of each layer of material in the vessel. The interpolation formula is

$$T = T' - N(T' - T''),$$

where T' and T" are the measured heat-loss corrections corresponding to the A' and A" heaters, and N is an interpolation factor. The heat-distribution correction factor is given by

$$H = 1 + T.$$

Typical values of T' and T" are less than 0.005; thus N need not be known very accurately to provide adequate interpolation accuracy. Indeed, the average of a set of 13 determinations of these values over a period of 4 months was T' = 0.003 and T" = 0.000. In practice it is convenient to use these values to determine T and H rather than to redetermine the values at intervals. The

A' and A" heaters were later removed from the vessels. After the small correction has been made for this heat-distribution error, the uncertainty in the final results from this source is believed to be less than ± 0.5%.

4.5 Radiant Power Loss

From Stefan's law, the radiant power emitted by a body is given by

$$P = e\sigma A(T_b^4 - T_s^4)$$

where e is the emissivity of the surface, the Stefan-Boltzmann constant $\sigma = 5.7 \times 10^{-8}$ $W \cdot m^{-2} \cdot K^{-4}$, A is the surface area of the body, and T_b and T_s are the absolute temperatures of the body and the surroundings, respectively. For the emissivity of brass we assume 0.3. The surface area of the brass vessel is $A = 2.6 \times 10^{-3}$ m^2. If $\Delta T = T_b - T_s = 5$ K and $T_s = 298$ K (25°C), then $P = 0.024$ W. This temperature difference corresponds to operation at the 10 W level with a high flow rate. The loss is only 0.24% of 10 W. At lower power levels it is best not to reduce the flow rate proportionately, but to use as high a flow rate as possible, consistent with adequate resolution, a rule that will also minimize the response time. The difference in the radiant power loss from the two vessels is much less than that calculated above. The net error is estimated to be no greater than ± 0.1%.

5. ELECTRICAL FEEDBACK AND CONTROL

5.1 Power Feedback

The difference between the temperatures of the matched sensing elements in the two vessels produces a voltage which is amplified to develop electrical power for dissipation in one vessel that is very nearly equal to the power dissipated in the other vessel. Feedback is relatively prompt, and the system responds rapidly to reduce the difference in power. Wholey and Boff [10] discuss the effect of loop gain in a feedback calorimetric system. If the effective loop gain is large compared to unity, the powers in both vessels become nearly equal. In a power feedback system with power-to-voltage sensors and constant voltage gain in the amplifiers, the voltage feedback ratio and loop gain under static conditions are not constant, but are proportional to the voltage developed across the electrical load. To reduce this variation in the loop gain, the amplifier is modified as noted below.

For a non-inverting feedback amplifier with open-loop gain A and input voltage e_x, the voltage fed back to the amplifier inverting input is $e_f = \beta V_f$ where β is the voltage feedback ratio. The net amplifier input is $e_s = e_x - e_f$,

and the amplifier output (heater) voltage is $V_f = Ae_s = Ae_x - A\beta V_f$. The loop gain is $A\beta$, and the closed-loop gain is

$$V_f/e_x = A/(1 + A\beta) = (1/\beta)/(1 + 1/A\beta).$$

For the moment, assume that there are no heat-distribution errors; i.e., heat losses in the two vessels are presumed equal, and assume that A is constant for all power levels. P_x is the power developed in the test vessel, $P_f = V_f^2/R_f = I_f^2 R_f$ is the feedback power developed in the feedback resistance load, R_f, in the other vessel, e_x and e_f are the voltages developed from the thermal sensors in the streams from the vessels, and the power/voltage sensitivity factors are defined by $S_x = P_x/e_x$ and $S_f = P_f/e_f$. Then $e_f = V_f^2/R_f S_f$ and $\beta = e_f/V_f = P_f/V_f S_f = V_f/R_f S_f = \sqrt{P_f/R_f}/S_f = I_f/S_f$. The closed-loop voltage gain can be written

$$(P_f/\beta S_f)/(P_x/S_x) = (1/\beta)/(1 + 1/A\beta)$$

and from this the power ratio is

$$P_f/P_x = (S_f/S_x)/(1 + 1/A\beta) = 1/GK = 1/J$$

where $G = 1 + 1/A\beta$ is the gain correction factor, $K = S_x/S_f$ is the sensitivity ratio factor, and $J = KG$ is a correction factor. As the power level is decreased, the gain error $1/A\beta$, increases.

As constructed, the open-loop gain is modified by a square-rooter circuit in the amplifier. This has the desirable effect of making the gain error small and constant for all measurement power levels when operation is within the functional range of the amplifier and square-root circuit. The square root function deteriorates only at very low power levels. The small error is corrected by application of the correction factor J.

The response time in automatic operation is about 4 minutes for 99.9% response.

5.2 Temperature Bridge

The temperature measurement and control system used in the calorimeter is based on a bridge with inductively coupled ratio arms [12]. This approach provides the best stability and sensitivity by eliminating the effects of thermal electromotive forces and by relying upon the inherent ratio stability of an inductive voltage divider.

The electrical circuitry (see figure 3) may be divided into several functional blocks for easier understanding: (1) the bridge; (2) oscillator; (3) preamplifier and bandpass filter; (4) post amplifier; (5) power amplifier; and (6) auxiliary circuits.

All controls used in normal measurements are located on the front panel of the electrical control unit. The exceptions to this are the pump speed and direction controls located in a separate box and the phase balance variable capacitor which is accessible on the rear of the chassis. Most connectors are on the rear of the chassis. Exceptions are the connectors for the voltmeter and an external detector (optional) which are located on the front panel. Connectors and adapters forming a coaxial link between the internal oscillator and the bridge circuit are located on the chassis. The link can be disconnected to permit use of an external oscillator (manual operation only), or a T-adapter can be inserted to provide access to the internal oscillator voltage for use as a reference for an external detector, if desired.

The inductive branch of the bridge comprises T2 and T3; the two temperature dependent resistance sensors make up the other branch. Excitation is coupled from the oscillator through T1, and the unbalanced signal is coupled out to the preamplifier through T4.

The 1000 Hz bridge oscillator supplies 7.5 volts to a 18:1 step-down voltage transformer, T1, from which 0.4 volts is supplied to the sensor bridge. The bridge consists of the two sensors, the phase balance capacitors, the 402:2 step-down inductive voltage divider, T2, and the multi-decade inductive voltage divider, T3. T3 has a least count of ratio (1 division on the lowest dial) of 1×10^{-5}. T2 and T3 are connected so that the least count on the inductive voltage divider, T3, which is used as the N (null) BALANCE adjustment, is equivalent to a change of bridge ratio of 5×10^{-8}. The sensors are nickel-iron resistance thermometers having a resistance R = 676 ohms at 25°C, and $\Delta R/\Delta T = 3\ \Omega \cdot K^{-1}$. A change of 5×10^{-8} in the bridge ratio would occur if one sensor changed resistance by 0.14×10^{-3} ohm. This is equivalent to 47×10^{-6} K. At the normal flow rate, the absorbing liquid exhibits a temperature rise per unit power of $\Delta T/P = 0.4\ K \cdot W^{-1}$ (measured value) hence, the least count on the N BALANCE inductive voltage divider corresponds to a power of about 0.12×10^{-3} W.

The bridge output signal is amplified and detected by a synchronous detector to yield a positive or negative voltage to drive the null indicator. A SENSITIVITY control is provided for changing the gain of the amplifier when it is used as a null amplifier (e.g., in manual operation). In automatic operation, when the detector voltage is positive (only) it also controls a d-c amplifier which drives a follower and the B, or A, heater, as selected by the MAIN POWER rotary switch. The follower can be controlled manually by the MAIN LEVEL SET control when the AUTO-MAN switch is in the MAN position. Similarly, the AUXILIARY LEVEL SET control can drive the B, A, A', or A" heaters as selected by the AUXILIARY POWER rotary switch. This switch is electrically interconnected to the MAIN POWER rotary switch so as to prevent the simultaneous application of power to one heater from both power sources. When the

MAIN POWER rotary switch is placed in the N position, both power sources are disconnected from the heaters so that the N BALANCE control can be adjusted to balance the bridge.

5.3 Bridge Electronics

The oscillator module, Y1, simultaneously generates stable, low-distortion sine and cosine waveforms at 1000 Hz. The cosine output is used as the reference waveform for the in-phase detector that provides a dc output proportional to the resistive unbalance of the sensing bridge. The sine output is similarly used as the reference for the phase detector which provides a dc output proportional to the reactive unbalance. The frequency of the oscillator can be adjusted by selection of R21 and R22. R23 is selected to provide the proper output amplitude.

The preamplifier is a very low noise integrated circuit optimized for the amplification of nanovolt signals from the particular source resistance presented by the sensing bridge. Amplifier AR1 provides approximately 60 dB of gain. The dc output voltage at pin 7 of AR1 is set to 7.5 volts by means of R3. Diodes D1 and D2 provide a clamping action for signals large enough to overload the amplifier. The noise performance of the preamplifier is close to the theoretical limit; the spot noise figure is 2.0 dB at 1 kHz.

The bandpass assembly, FL1, is a 2-pole state-variable filter with a center frequency of 1 kHz and Q of 10. It provides a voltage gain of 20 dB. The center frequency of the filter is adjusted by tuning ganged controls R9 and R11. Tuning is best accomplished by initially adjusting R9 and R11 for zero phase shift through the filter, as indicated by a Lissajous pattern on an oscilloscope. Final trim adjustments can then be made by observing the indication of the balance meter with switch S1 in POWER position while slightly upsetting the adjustment of C1. The principle here is that small quadrature signals can be deliberately generated by varying C1 while adjusting the tuning of the bandpass filter such that these signals produce no output from the power detector, U1. This insures that residual phase shifts in the transformers, etc., have been properly compensated by equal and opposite phase shifts introduced by a slight detuning of the bandpass filter. The effect of the detuning on the gain of the filter is negligible, and the setting is stable.

A post-amplifier, A3, provides up to an additional 60 dB of AC gain after the filter and allows for front panel adjustment of the servo sensitivity in the MANUAL mode. In the AUTO mode, R27A may be adjusted to provide maximum gain without servo instability (typically 34 dB).

The amplified error signal from AR3 is applied to two 4-quadrant analog multipliers which serve as phase-sensitive detectors for both the in-phase and quadrature components of the amplified error signal. The in-phase detector, U1, is driven by the cosine output of the 2-phase oscillator, Y1. The output of the multiplier consists of the product of two sinusoids of the same frequency and therefore contains a dc component proportional to the amplitude of each and to the cosine of the phase difference between them. The dc component is taken through a lowpass single-pole filter, controlled by the TIME CONSTANT switch. Finally, buffer amplifier AR4 isolates the lowpass filter from the following circuitry and provides an additional 16 dB of gain. The detected error signal from AR4 is clamped by AR6 to permit positive values only.

The error signal from the sensing bridge is proportional to the temperature difference between the two sensors, and the output signal from the phase detector is a linear function of the temperature difference. However, when the feedback loop is closed in automatic operation, the power in the heater is proportional to the square of the voltage across it. Therefore, in order to make the servo loop gain a constant, independent of the signal level, it is necessary to extract the square root of the amplified error signal before applying it to the heater. A small dc offset provided by AR7 prevents the gain of the square rooter, U3, from approaching infinity at low signal levels. The dc offset is then removed by AR8 and the signal is presented to the power amplifier which drives the heater. The power amplifier comprises AR9, Q2, and Q3.

The second phase detector, U2, performs in the same manner except that it is driven by the sine output of oscillator Y1. It provides a dc signal which is proportional to the reactive unbalance in the sensing bridge. By setting switch S1 to the QUAD position, the signal may be nulled by trimming C1 and C2.

If overloading occurs in the amplifier, the response time may be lengthened significantly. A circuit to indicate overload was incorporated to notify the operator to change the time constant control to compensate. The ac signal from the bandpass filter, FL1, is rectified by D3 and compared with a dc level set by R20. The comparator AR2 will cause a front panel overload lamp to light if the amplitude is high enough to cause overload in the servo.

A null meter is necessary to permit initial balance of the bridge before automatic operation, or for full manual operation. The null meter amplifier, AR5, drives a front panel zero-center indicator with approximate logarithmic response provided by diodes D4 and D5. The input to the meter circuitry is selected by a front panel switch S1.

5.4 Metering Circuits

The 1-ohm precision resistor in the output of the auxiliary power supply is used with a digital voltmeter to convert the voltage readings to current readings, in amperes. It is connected to the circuit as a 4-terminal resistance. It can be removed, and measured by ordinary resistance measurement methods, and the voltmeter can be calibrated by ordinary potentiometric methods, in an electrical measurements laboratory.

The digital voltmeter (DVM) circuit is arranged so that a digital d-c voltmeter can be switched to measure the voltage applied to any heater (B, A, A', or A"), or the current supplied by the auxiliary power supply by measuring the voltage across a precision 1-ohm resistor which carries the current. This permits the measurement of both voltage and current for any heater, the resistance of which can then be calculated. The precision 1-ohm resistor has been adjusted to 1.0000 ohm ± 0.05%. The voltmeter supplied with the system is accurate within ± 0.05% ± 2 digits. In the worst case, when the reading is 1.000, the full range of the meter is not being used and the 2-digit limits are equivalent to ± 0.2%. In the measurement of the heater resistance, the voltage can be adjusted to obtain nearly full-scale voltmeter readings that minimize the effect of the ± 2 digit uncertainty. Two readings are required, and the net error in calculated heater resistance is estimated as ± 0.1%. Electrical power is calculated by squaring the heater voltage and dividing by the heater resistance; therefore, in the worst case, the measured electrical power could be in error by ± 0.6%, but in most cases is much less.

6. OPERATIONAL PROCEDURES

6.1 Preliminary Procedures

Prior to using the calorimeter, the system should be purged of bubbles. Bubble traps have been incorporated in the design of the calorimeter to prevent bubbles from entering the vessels during operation. Bubbles that occur in the system can be eliminated by manipulation of the rubber tubing and by reverse operation of the pumps whenever necessary, usually about once a day, before operation.

Next, the normal pressure on the membranes is adjusted by opening the reservoir clamps and adjusting the height of the reservoir until both membranes are slightly convex upward, and then closing the clamps.

The transducer to be tested is then mounted over one of the vessels using simple brackets and an adapter-spacer. The adapter-spacer must be used to center the transducer in the water well over the vessel, to keep it from being pushed into the membrane, and to keep water flowing under the transducer to flush away heat developed at the face of the transducer. The spacer also assures a

definite placement of the transducer so that the coupling-loss correction factor can be determined with adequate accuracy, and so that the beam is aligned with the axis of the vessel. A set of adapter-spacers with beveled inside edges was constructed to accommodate most circular transducers. A transparent disk is placed over the other vessel to control the flow of coupling liquid (water).

6.2 Precautions

At high power levels, the onset of cavitation is a limit to the power that can be measured accurately by the calorimeter. For a transducer near the surface of water, gaseous cavitation can occur if the acoustical pressure exceeds the ambient (atmospheric) pressure which is about 1.0×10^5 Pa at sea level. The intensity in water ($\rho_o c = 1.5 \times 10^6$ kg·m^{-2}·s^{-1}) corresponding to a value of peak pressure equal to that of the ambient pressure is given by

$$I = p^2/2\rho_o c = 3.3 \times 10^3 \text{ W·m}^{-2}$$

With the power evenly distributed over the useful area of the calorimeter port (about 5 cm^2) the maximum cw power that can be measured without risking cavitation is about 1.7 W. For transducers having an area smaller than the calorimeter port area, the maximum power without cavitation would be smaller than this. However, with pulsed waveform, somewhat larger power can be used without cavitation occurring. If there is any question whether cavitation will occur in a specific case, a separate test should be made to determine the maximum excitation to the transducer that can be used without cavitation. The troublesome region for cavitation in the calorimeter is immediately in front of the transducer. Beyond this region the ultrasound is attenuated, and cavitation is not so likely to occur.

At very low power levels it is necessary to minimize drift in the calorimeter by placing a plastic sheet or cover over the bath after mounting the transducer.

To avoid errors caused by the small reflections in the vessel, it is good practice to gently rock the transducer a few degrees during the last minute of the test.

6.3 Ultrasonic Power Measurements

For automatic operation of the calorimeter the system must be balanced prior to the application of ultrasonic power. This is accomplished by adjusting the null balance control in the electrical control unit. Then, the ultrasonic transducer can be energized. In automatic operation, the system will attain equilibrium in 3 to 4 minutes. The voltage across the electrical heater, V_{FB}, is then read and recorded. The feedback electrical power is then calculated from the formula $P_{FB} = V_{FB}^2/R_B$, where R_B is the resistance of the

B heater. The ultrasonic power in vessel A is

$$P_{UA} = P_{FB}JHCFL$$

where J = GK, G is the gain correction factor in the feedback circuit, K is the sensitivity ratio factor, H is the heat-distribution correction factor, C is the coupling-loss correction factor, F is a frequency dependent correction factor, and L is a transducer loss correction factor. These factors are discussed below.

6.4 Determination of the J, K, and G Factors

It is desirable that the power/voltage sensitivities, S_A and S_B, of the temperature sensors be matched such that the ratio, K, of these sensitivities is constant for all power levels and flow rates. However, the sensor sensitivities may vary independently to some extent, especially as a function of flow rate, because of slight differences in construction. Also, the gain correction factor, G, is a function of power level. The values of K and G and J = KG at any flow rate and power level combination, as typically used in a test of a transducer, can be determined by the following procedure. Transparent cover disks are placed in both vessels A and B. After a few minutes, adjust the null balance control to obtain an initial balance. Increase the electrical power, P_{EA}, to obtain the desired feedback power, P_{FB}, about equal to that used in the test. After equilibrium is again obtained, the feedback voltage is read and recorded, and P_{FB} is calculated. Then, $J = P_{EA}/P_{FB}$.

7. EQUATIONS OF OPERATION

With ultrasonic power, P_{UA}, and also some electrical power, P_{EA} (included for generality) in the A vessel, the power sensed by the A sensor is

$$P_A = P_{UA}/H_AC_A + P_{EA}$$

where P_{UA} is the ultrasonic beam power emitted by the transducer, C_A is the coupling-loss correction factor, H_A is the heat-distribution correction factor. The A sensor power/voltage sensitivity is

$$S_A = P_A/e_A$$

where e_A is the voltage developed by the bridge circuit applied to the feedback amplifier as a result of power P_A (with $P_B = 0$).

In vessel B, the power sensed by the B sensor is (in general)

$$P_B = P_{UB}/H_BC_B + P_{EB}$$

The B sensor power/voltage sensitivity is

$$S_B = P_B/e_B.$$

When feedback power, P_{FB}, is applied to the heater in vessel B,

$$P_{EB} = P_{FB}.$$

At equilibrium, in normal operation ($P_{UB} = 0$)

$$e_A = e_{FB}G$$

where e_{FB} is the bridge voltage developed as a result of the feedback power alone, and $G = 1 + 1/A\beta$ is the gain correction factor for the automatic feedback circuit. Then

$$P_A/S_A = P_{FB}G/S_B$$

or

$$P_A = P_{FB}GK$$

where $K = S_A/S_B$. The equation for automatic operation is

$$P_{UA} = (P_{FB}GK - P_{EA})H_AC_A.$$

The equation for manual operation is

$$P_{UA} = (P_{EB}K - P_{EA})H_AC_A.$$

A correction factor, F, is applied to correct for certain systematic errors described previously that are either constant or a function of the ultrasonic frequency (in megahertz)

$$F = 1 - 0.003 + 0.004/f + 0.0005\ f + 0.00025\ f$$

$$= 1 - 0.003 + 0.004/f + 0.00075\ f$$

The first correction term ($F_1 = -0.003$) accounts for the evaluation heater (I^2R) lead-wire losses. The second correction term ($F_2 = 0.004/f$) accounts for the reflection loss from solids in the vessel. The third correction term ($F_3 = 0.0005\ f$) accounts for heat conduction loss through the membrane. The fourth correction term ($F_4 = 0.00025\ f$) accounts for the loss in the membrane by absorption of ultrasonic energy.

A correction, L, for heat loss from the test transducer can be applied. For solid-backed ceramic transducers $L = 0.993$, and for air-backed quartz transducers $L = 0.999$.

The full equation for automatic operation is

$$P_{UA} = (P_{FB}GK - P_{EA})H_AC_AFL = (P_{FB}J - P_{EA})H_AC_AFL$$

where $J = GK$. For manual operation, the full equation is

$$P_{UA} = (P_{EB}K - P_{EA})H_AC_AFL.$$

If the ultrasound is introduced into the B vessel and electrical power is applied manually to the A vessel, the equations above must be modified by exchanging the symbols A and B in the subscripts, including the equation for K (thus, $K = S_B/S_A$ in this mode of operation). The corrections H and C are applied in the same manner as for normal operation, because the vessels are essentially identical. If automatic operation is desired, with electrical feedback into the A vessel, switch the AUTO switch (at the rear of the chassis) to the A position. This switch reverses the phase of the signal from the oscillator to the sensor bridge so that the bridge output signal will produce proper operation of the phase sensitive detector.

Two ultrasonic beams can be compared simultaneously by placing one transducer over the A vessel and the other over the B vessel. First, a null balance is obtained with the beams off. Then, with both beams on, one of them can be adjusted to regain equilibrium. If no electrical power is used in either vessel,

$$P_{UA} = P_{UB} K H_A C_A F_A L_A / H_B C_B F_B L_B$$

where $K = S_A/S_B$. If electrical power is manually added to the vessel having the smallest ultrasonic power, the unknown power can be determined by solving the equation

$$P_{UA}/H_A C_A F_A L_A + P_{EA} = K(P_{UB}/H_B C_B F_B L_B + P_{EB})$$

8. SUMMARY OF MEASUREMENT UNCERTAINTIES

Elementary sources of error in the calibration and use of the calorimeter have been discussed in the foregoing text. A summary of these error sources, with estimates of the magnitude of the possible errors, is given in table 1. Only those sources of error that are believed to contribute in excess of 0.1% are listed. These estimates are based on a limited set of experiments. It must be recognized that such limits are subjective and are not strict bounds. A component of uncertainty from system noise and drift has been included in the table to account for changes in the system characteristics during a test and calibration. Credible limits of systematic error are believed to be ± 2.5% from 1 to 10 MHz, and ± 3% from 10 MHz to 15 MHz; the standard deviation of random errors has been found to be about 1.5%. The sum of the limits of systematic error and 3 times the standard deviation is about ± 8%.

Accuracy of the calorimetric measurements depends also on the stability of the beam power from the transducer under test. The uncertainties shown in the table do not include effects of drifts or random variations during the test from, or within, the device under test.

9. ACKNOWLEDGMENTS

This project was supported in part by the Acoustics Branch, Division of Electronics Products, Bureau of Radiological Health, Food and Drug Administration. The authors thank H.F. Stewart and B.A. Herman of that agency for their advice and support. Within the National Bureau of Standards, the authors thank P.A. Hudson and M.C. Jones for their technical advice and suggestions, V. Lecinski for numerous mechanical drawings, W.G. Layne and W.T. Roberts for fabrication of the mechanical parts.

10. REFERENCES

[1] Gunn, S.R., Radiometric calorimetry: a review, Nuclear Instruments and Methods 29, 1-24 (1964).

[2] Gunn, S.R., Radiometric calorimetry: a review, (1970 supplement), Nuclear Instruments and Methods 85, 285-312 (1970).

[3] Gunn, S.R., Calorimetric measurements of laser energy and power, J. Phys. E: Sci. Instrum. 6, 105-114 (1973).

[4] Wells, P.N.T. Bullen, M.A., Follett, D.H., Freundlich, H.F. and James, J. Angell, The dosimetry of small ultrasonic beams, Ultrasonics, 106-110 (1963).

[5] Sokollu, A., Absolute measurement of total radiated power of ultrasonic transducers for biomedical use, Bulletin du Laboratoire d'Electroacoustique, Université de Liége 9, 23-27 (April 1966).

[6] Zieniuk, J.K., Ultrasonic thermoprobe, Ultrasonics, 136-137 (July 1966).

[7] Jones, J.B., A calorimetric method and apparatus for evaluating transducer assemblies, IEEE Trans. on Sonics and Ultrasonics SU-16, 76-78 (April 1969).

[8] Zieniuk, J.K. and Evans, B., The influence of thermal parameters on making ultrasonic power measurements by a calorimetric method, Acustica 25 47-52 (1971).

[9] Gunn, S.R. High capacity radiometric calorimeters, U.S. Atomic Energy Commission, UCRL-5375 (1958).

[10] Wholey, B. and Boff, F., Improvements in microwave power measurements through the use of feedback, IRE Proceedings, Pt. B., Supp. No. 23, 740-743 (1962).

[11] Ginnings, D.C. and West, E.D., Heater lead problem in calorimetry, Rev. Sci. Instruments 35, No. 8, 965-967 (August 1964).

[12] Larsen, N.T., 50 Microdegree temperature controller, Review of Scientific Instruments 39, No. 1, 1-12 (January 1968).

Table 1. Summary of estimated uncertainties.

Source of Error	Uncertainty (limits of error) Ultrasonic Frequency 1 MHz	5 MHz	10 MHz	15 MHz
	%	%	%	%
I. SYSTEMATIC ERROR LIMITS				
1. Reflection loss from solids (F2)	± 0.1	± 0.1	0.0	0.0
2. Sensor ratio (J or K) correction	± 0.5	± 0.5	± 0.5	± 0.5
3. Sensor element mismatch	± 0.1	± 0.1	± 0.1	± 0.1
4. Sensor laminar flow dependency	± 1	± 1	± 1	± 1
5. Evaluation heater lead-wire loss (F1)	± 0.1	± 0.1	± 0.1	± 0.1
6. Evaluation heater lead-wire power	± 0.1	± 0.1	± 0.1	± 0.1
7. Coupling loss (C) correction	± 0.0	± 0.1	± 0.5	± 1
8. Lossy transducer heat (L) correction	± 0.3	± 0.3	± 0.3	± 0.3
9. Loss in membrane (F4)	0.0	0.0	± 0.1	± 0.2
10. Loss through membrane by conduction (F3)	0.0	± 0.1	± 0.2	± 0.3
11. Heat-distribution (H) correction	± 0.5	± 0.5	± 0.5	± 0.5
12. Radiant power loss mismatch	± 0.1	± 0.1	± 0.1	± 0.1
13. Electrical power (P_E) measurement	± 0.6	± 0.6	± 0.6	± 0.6
II. RANDOM ERRORS				
Noise and drift	(std. dev. ≃ 1.5% + 0.2 mW)			
Systematic ± Σu	± 3.4	± 3.6	± 4.1	± 4.8
± $\sqrt{\Sigma u^2}$	± 1.4	± 1.4	± 1.5	± 1.8
Credible	± 2.5	± 2.5	± 2.5	± 3.0
Random	(σ ≃ 1.5% + 0.2 mW)			

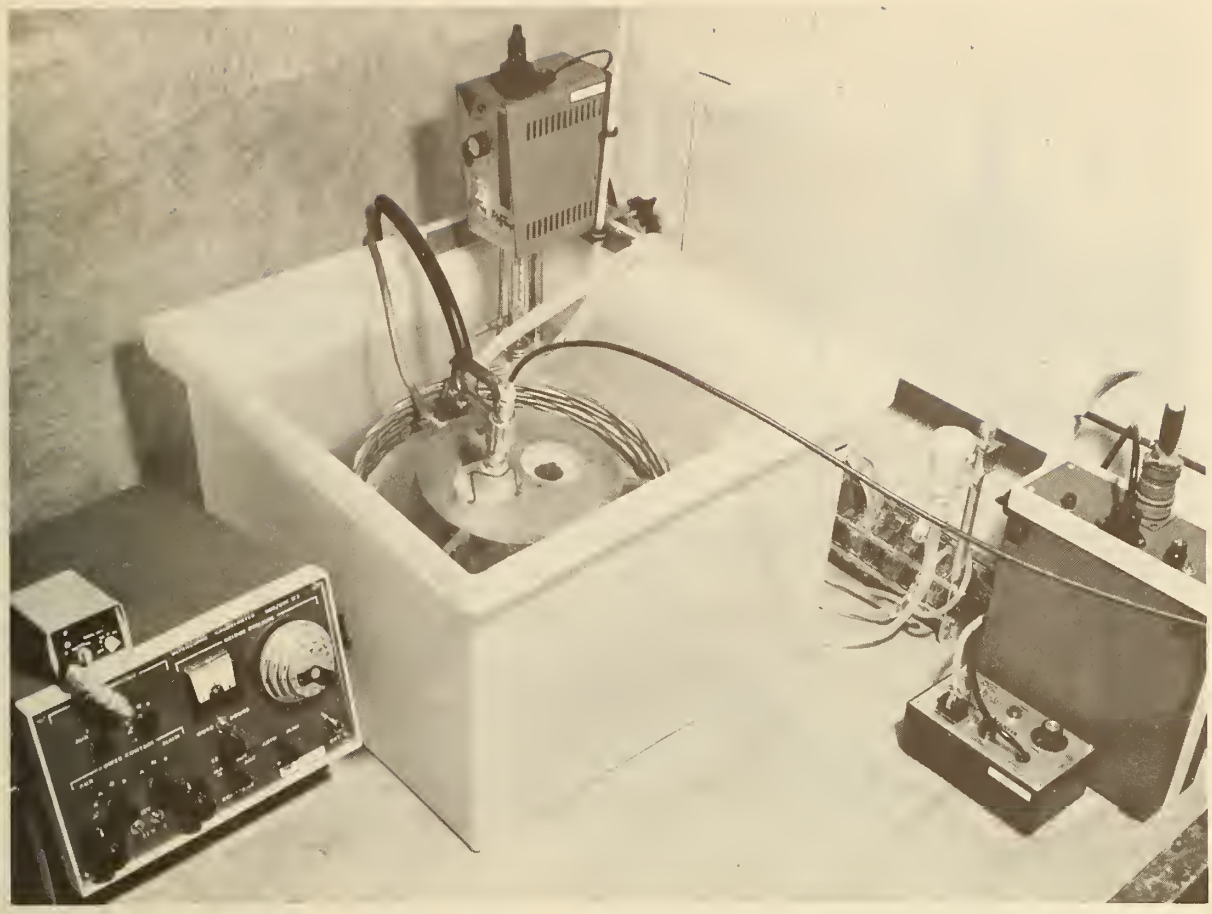

Figure 1. The NBS ultrasonic calorimeter, showing the electrical control unit, the twin, series-flow comparator in a water bath, pumps, and electrical power supply.

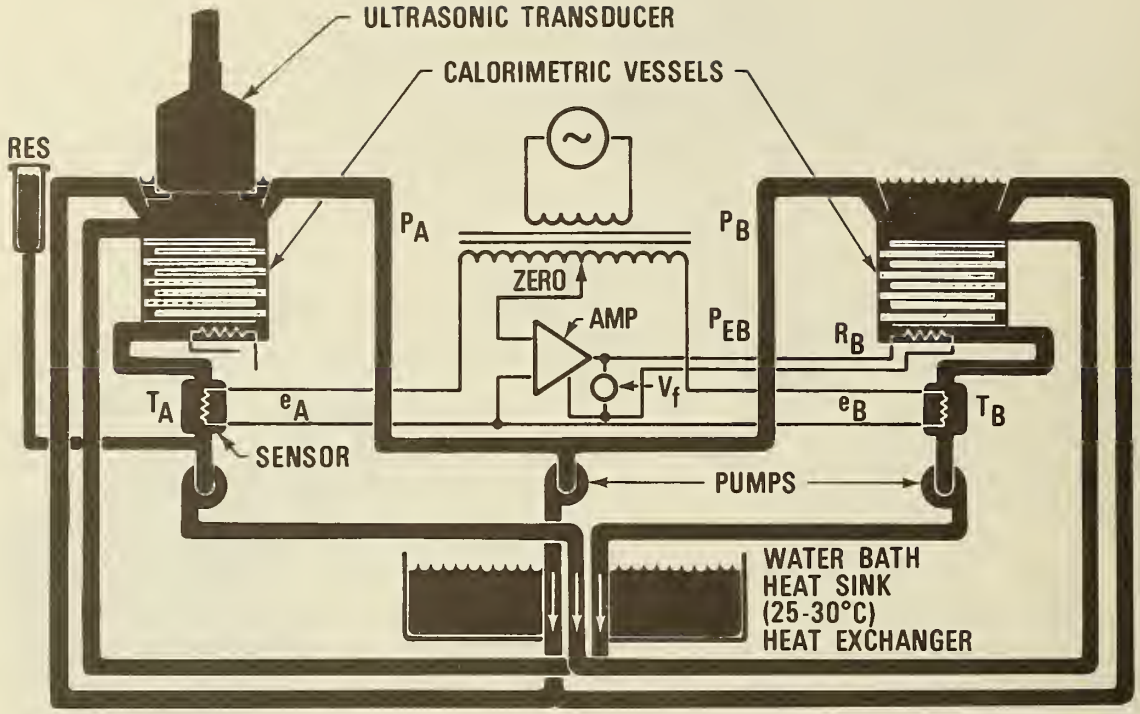

Figure 2. Schematic diagram of the twin, series-flow ultrasonic comparator.

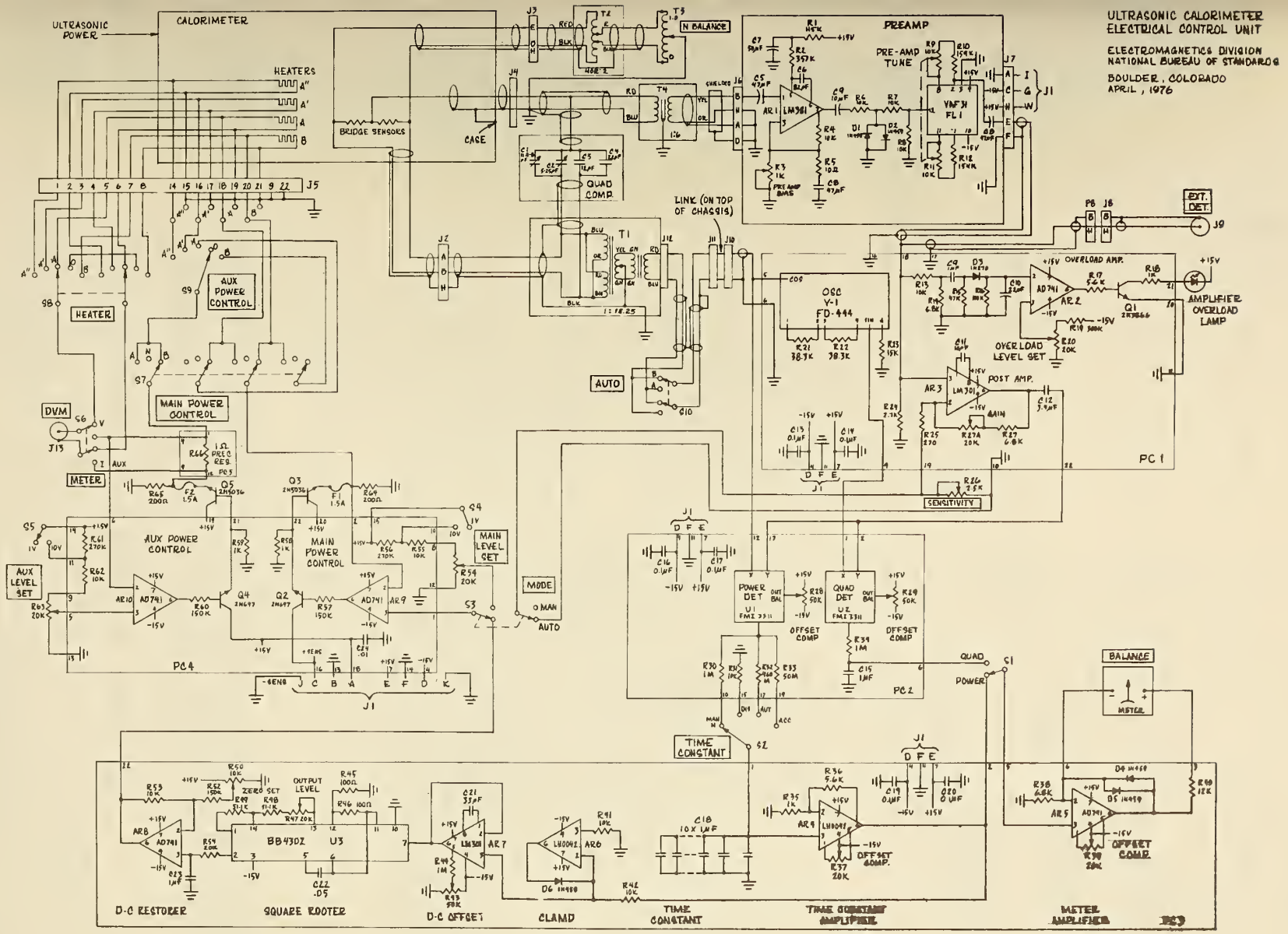

Figure 3. Schematic diagram of the electrical control unit.

NBS-114A (REV. 7-73)

U.S. DEPT. OF COMM. BIBLIOGRAPHIC DATA SHEET	1. PUBLICATION OR REPORT NO. NBS Tech Note No. 686	2. Gov't Accession No.	3. Recipient's Accession No.

4. TITLE AND SUBTITLE

Ultrasonic Calorimeter for Beam Power Measurements

5. Publication Date: September 1976

6. Performing Organization Code: 276

7. AUTHOR(S) Thomas L. Zapf, Morris E. Harvey, Neil T. Larsen and Robert E. Stoltenberg

8. Performing Organ. Report No.

9. PERFORMING ORGANIZATION NAME AND ADDRESS

NATIONAL BUREAU OF STANDARDS
DEPARTMENT OF COMMERCE
WASHINGTON, D.C. 20234

10. Project/Task/Work Unit No.: 2762111

11. Contract/Grant No.

12. Sponsoring Organization Name and Complete Address *(Street, City, State, ZIP)*

Sponsored in part by:
Acoustics Branch
Division of Electronic Products
Bureau of Radiological Health
Food and Drug Administration

13. Type of Report & Period Covered

14. Sponsoring Agency Code: Interagency Agreement FDA 224-74-6038

15. SUPPLEMENTARY NOTES

16. ABSTRACT *(A 200-word or less factual summary of most significant information. If document includes a significant bibliography or literature survey, mention it here.)*

An ultrasonic calorimeter has been designed and constructed at the National Bureau of Standards for the measurement of beam power up to a few watts from ultrasonic transducers. The calorimeter, described as a twin, series flow, ultrasonic calorimetric comparator, operates in the frequency range from 1 to 15 MHz with uncertainties less than ± (7% + 0.2 mW). Twin vessels are provided so that thermal effects of an ultrasonic sound beam absorbed in one vessel can be compared rapidly with accurately measured dc electrical power in the other vessel. Absorbing liquid enters each vessel near the ultrasonic input port. The temperatures of the absorbing liquid at the input ports are equalized by a heat exchanger, and the mass-flow rates are the same in both vessels. Twin temperature sensors, located in the output flow from the vessels, are connected in an electrical bridge circuit. In automatic operation the bridge is connected to a feedback circuit. With ultrasonic power introduced into one vessel, the feedback circuit promptly applies power to an electrical heater in the other vessel to regain bridge balance. The ultrasonic power then equals the measured dc power corrected for known errors.

17. KEY WORDS *(six to twelve entries; alphabetical order; capitalize only the first letter of the first key word unless a proper name; separated by semicolons)*

Calorimeter; ultrasonic calorimeter; ultrasonic power measurements.

18. AVAILABILITY

[X] Unlimited

[ ] For Official Distribution. Do Not Release to NTIS

[ ] Order From Sup. of Doc., U.S. Government Printing Office Washington, D.C. 20402, SD Cat. No. C13

[X] Order From National Technical Information Service (NTIS) Springfield, Virginia 22151

19. SECURITY CLASS (THIS REPORT): UNCLASSIFIED

21. NO. OF PAGES: 36

20. SECURITY CLASS (THIS PAGE): UNCLASSIFIED

22. Price: $0.85

☆ U. S. GOVERNMENT PRINTING OFFICE: 1976—677-347/1298 REGION NO. 8

USCOMM-DC 29042-P74

NBS TECHNICAL PUBLICATIONS

PERIODICALS

JOURNAL OF RESEARCH reports National Bureau of Standards research and development in physics, mathematics, and chemistry. It is published in two sections, available separately:

• **Physics and Chemistry (Section A)**
Papers of interest primarily to scientists working in these fields. This section covers a broad range of physical and chemical research, with major emphasis on standards of physical measurement, fundamental constants, and properties of matter. Issued six times a year. Annual subscription: Domestic, $17.00; Foreign, $21.25.

• **Mathematical Sciences (Section B)**
Studies and compilations designed mainly for the mathematician and theoretical physicist. Topics in mathematical statistics, theory of experiment design, numerical analysis, theoretical physics and chemistry, logical design and programming of computers and computer systems. Short numerical tables. Issued quarterly. Annual subscription: Domestic, $9.00; Foreign, $11.25.

DIMENSIONS/NBS (formerly Technical News Bulletin)—This monthly magazine is published to inform scientists, engineers, businessmen, industry, teachers, students, and consumers of the latest advances in science and technology, with primary emphasis on the work at NBS. The magazine highlights and reviews such issues as energy research, fire protection, building technology, metric conversion, pollution abatement, health and safety, and consumer product performance. In addition, it reports the results of Bureau programs in measurement standards and techniques, properties of matter and materials, engineering standards and services, instrumentation, and automatic data processing.

Annual subscription: Domestic, $9.45; Foreign, $11.85.

NONPERIODICALS

Monographs—Major contributions to the technical literature on various subjects related to the Bureau's scientific and technical activities.

Handbooks—Recommended codes of engineering and industrial practice (including safety codes) developed in cooperation with interested industries, professional organizations, and regulatory bodies.

Special Publications—Include proceedings of conferences sponsored by NBS, NBS annual reports, and other special publications appropriate to this grouping such as wall charts, pocket cards, and bibliographies.

Applied Mathematics Series—Mathematical tables, manuals, and studies of special interest to physicists, engineers, chemists, biologists, mathematicians, computer programmers, and others engaged in scientific and technical work.

National Standard Reference Data Series—Provides quantitative data on the physical and chemical properties of materials, compiled from the world's literature and critically evaluated. Developed under a world-wide program coordinated by NBS. Program under authority of National Standard Data Act (Public Law 90-396).

NOTE: At present the principal publication outlet for these data is the Journal of Physical and Chemical Reference Data (JPCRD) published quarterly for NBS by the American Chemical Society (ACS) and the American Institute of Physics (AIP). Subscriptions, reprints, and supplements available from ACS, 1155 Sixteenth St. N.W., Wash. D. C. 20056.

Building Science Series—Disseminates technical information developed at the Bureau on building materials, components, systems, and whole structures. The series presents research results, test methods, and performance criteria related to the structural and environmental functions and the durability and safety characteristics of building elements and systems.

Technical Notes—Studies or reports which are complete in themselves but restrictive in their treatment of a subject. Analogous to monographs but not so comprehensive in scope or definitive in treatment of the subject area. Often serve as a vehicle for final reports of work performed at NBS under the sponsorship of other government agencies.

Voluntary Product Standards—Developed under procedures published by the Department of Commerce in Part 10, Title 15, of the Code of Federal Regulations. The purpose of the standards is to establish nationally recognized requirements for products, and to provide all concerned interests with a basis for common understanding of the characteristics of the products. NBS administers this program as a supplement to the activities of the private sector standardizing organizations.

Consumer Information Series—Practical information, based on NBS research and experience, covering areas of interest to the consumer. Easily understandable language and illustrations provide useful background knowledge for shopping in today's technological marketplace.

Order **above** *NBS publications from: Superintendent of Documents, Government Printing Office, Washington, D.C. 20402.*

Order **following** *NBS publications—NBSIR's and FIPS from the National Technical Information Services, Springfield, Va. 22161.*

Federal Information Processing Standards Publications (FIPS PUBS)—Publications in this series collectively constitute the Federal Information Processing Standards Register. Register serves as the official source of information in the Federal Government regarding standards issued by NBS pursuant to the Federal Property and Administrative Services Act of 1949 as amended, Public Law 89-306 (79 Stat. 1127), and as implemented by Executive Order 11717 (38 FR 12315, dated May 11, 1973) and Part 6 of Title 15 CFR (Code of Federal Regulations).

NBS Interagency Reports (NBSIR)—A special series of interim or final reports on work performed by NBS for outside sponsors (both government and non-government). In general, initial distribution is handled by the sponsor; public distribution is by the National Technical Information Services (Springfield, Va. 22161) in paper copy or microfiche form.

BIBLIOGRAPHIC SUBSCRIPTION SERVICES

The following current-awareness and literature-survey bibliographies are issued periodically by the Bureau:

Cryogenic Data Center Current Awareness Service. A literature survey issued biweekly. Annual subscription: Domestic, $20.00; Foreign, $25.00.

Liquified Natural Gas. A literature survey issued quarterly. Annual subscription: $20.00.

Superconducting Devices and Materials. A literature survey issued quarterly. Annual subscription: $20.00. Send subscription orders and remittances for the preceding bibliographic services to National Bureau of Standards, Cryogenic Data Center (275.02) Boulder, Colorado 80302.

U.S. DEPARTMENT OF COMMERCE
National Bureau of Standards
Washington, D.C. 20234

OFFICIAL BUSINESS

Penalty for Private Use, $300

POSTAGE AND FEES PAID
U.S. DEPARTMENT OF COMMERCE
COM-215

U.S.MAIL

Fourth Class Mail